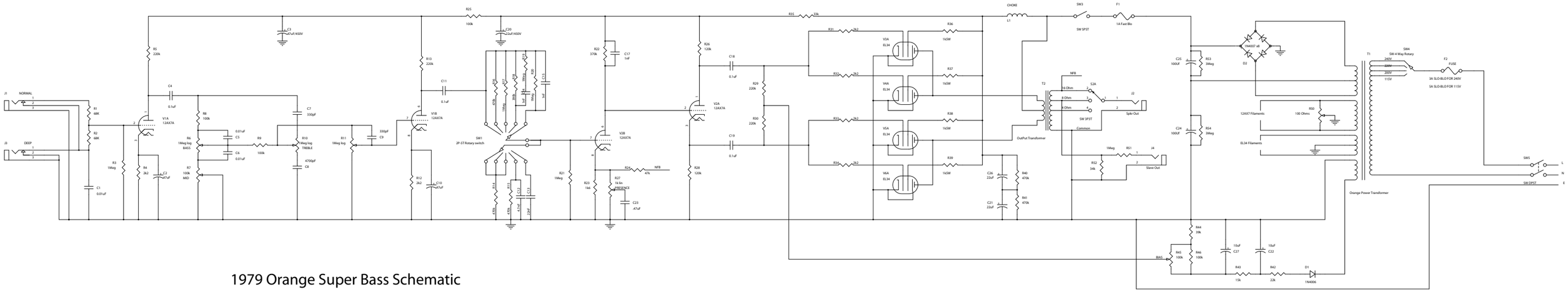

1979 Orange Super Bass Schematic